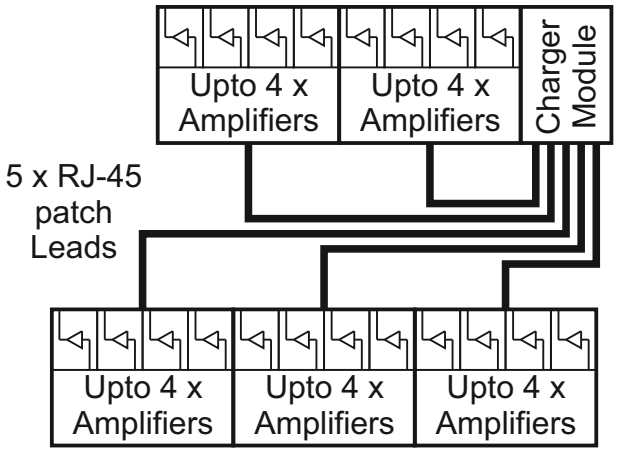
Upto 4 x Amplifiers
Upto 4 x Amplifiers
Charger Module
5 x RJ-45 patch Leads
Upto 4 x Amplifiers
Upto 4 x Amplifiers
Upto 4 x Amplifiers